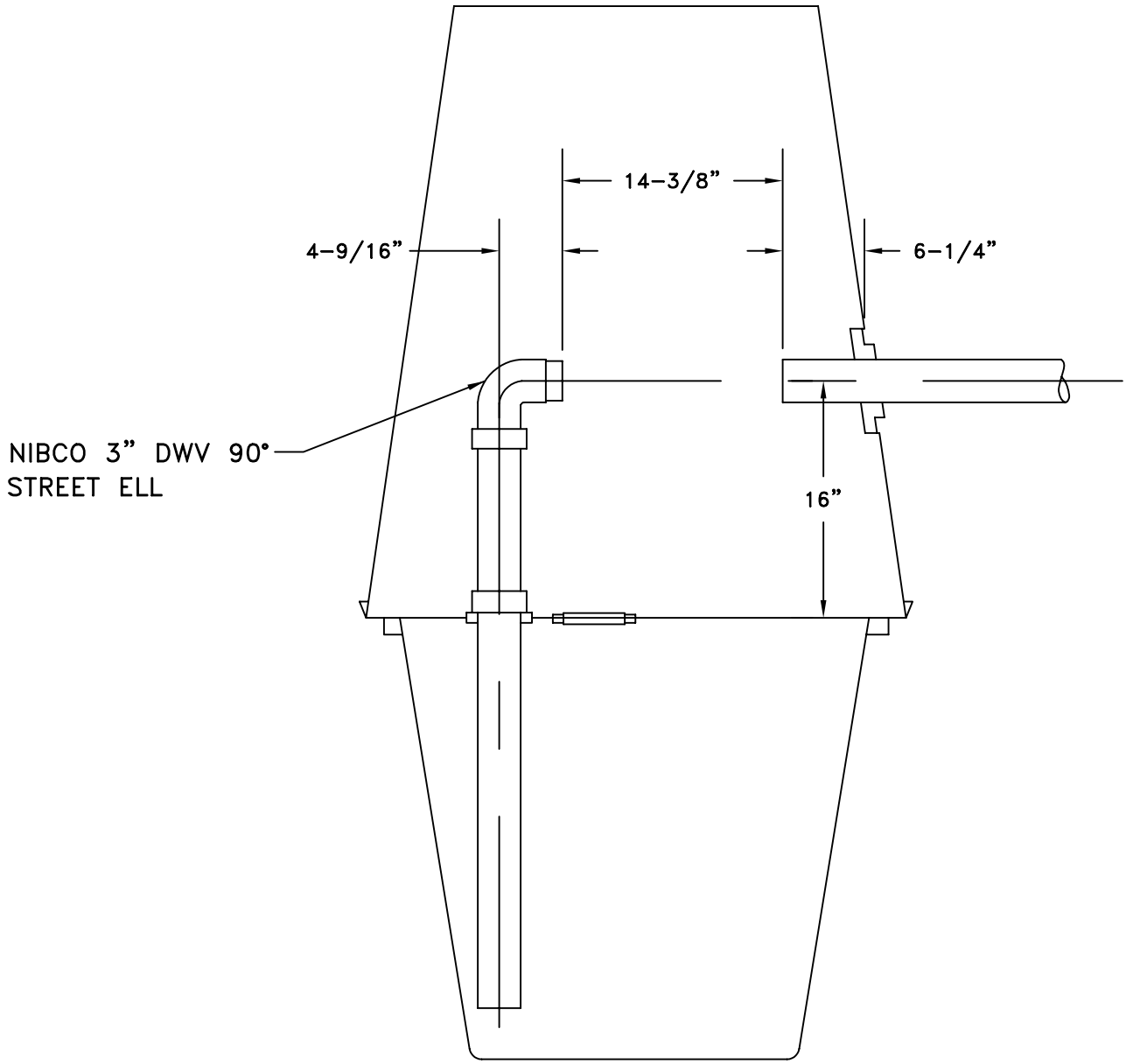

COMBINED VALVE PIT AND TANK ARRANGEMENT

CITY OF SANFORD	1999	FIG. 206