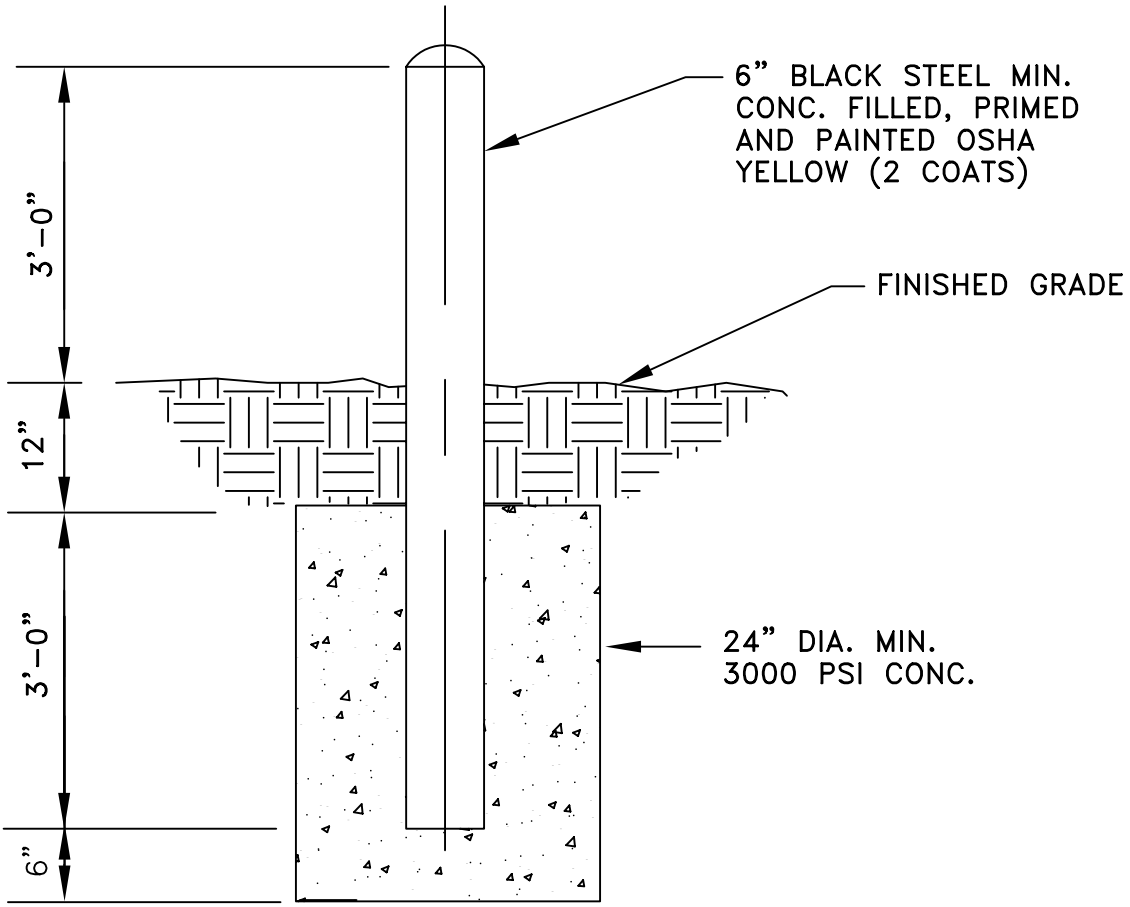

NOTE:

SITE LOCATION AND THE DEVICE TO BE PROTECTED MAY REQUIRE A LARGER DIAMETER PIPE AND CONCRETE ANCHOR.

BOLLARD

CITY OF SANFORD	1999	FIG. 116